140|150X SERIES

JCB

INTRODUCING THE NEXT IN THE X SERIES

Our vision from the start was to design and engineer our most advanced tracked excavator range ever.

The new JCB 14-15 tonne machines sit perfectly alongside their highly acclaimed 20 tonne big brother.

Our engineering teams have once again obsessed over every minute detail of this new world-class excavator and used the same quality materials and proven components.

The result is a machine range to be taken seriously.
A machine range to be trusted.

LORD BAMFORD, CHAIRMAN, JCB

JCB
140X LC
X
SERIES

EXTREME STRENGTH

It's taken 4 years of hydraulic, electronic and electrical development and thousands of hours of extreme endurance testing, to build you a machine that doesn't just look extremely strong, it is extremely strong.

JCB
JCB
X
SERIES

EXTREME STRENGTH

Tested to extremes.

1 Whole machine shaker rig used to replicate 15,000 hours of tracking and vibration.

Our latest dig end which has been proven by machines across the globe.

Exhaustive testing on purpose built electronics and electric rigs to prove connections, layout and software.

2 30,000 window and door operation tests completed to prove components quality.

3 Hot and cold climate testing (55°C to -30°C) performed in controlled conditions and locations around the world.

Exceptional build quality.

4 Proven undercarriage with fully-welded X frame construction for long-term durability with components supplied by industry-leading suppliers.

5 Rigid upper frame, flat revolver side skirts and double skinned doors with new plated hinges provide greater strength.

Extremely robust fold back mechanism for cab mirror.

Finite Element Analysis ensures longer life for key components.

X SERIES

DIESELMAX RELIABILITY

Our engine technology is tried and proven; we've built 500,000 DIESELMAX units since 2004. To ensure similar longevity, the DIESELMAX engines have been tested to 110,000 hours in 70 different machines across the toughest applications and environments.

EXCEPTIONAL COMFORT

We've used ergonomic design, automotive quality materials and engineering excellence to deliver exceptional comfort. And with ride comfort and the quietest cab in its class, there's enough to make even the most demanding operator extremely happy.

X
SERIES

EXCEPTIONAL COMFORT

LOW NOISE

Improved cab isolation using latest double cushion viscous mounts reduces vibration and noise into the cab. This helps deliver the lowest in-cab noise of 67 dB(A).

CUSTOMER LED ERGONOMICS

Control layout reviewed and assessed by operators globally, with their feedback directly contributing to the final design.

Best operator environment.

1 Spacious JCB CommandPlus cab with high quality injection moulded interior. Industry-leading Grammer seat with wide, adjustable arm rests that reclines 145°.

New track pedal design with T-bars as standard with non-slip coating and optimised ergonomics.

2 Joystick and switch controls are mounted to pods which are suspended from the seat and move with the operator for optimum control and less fatigue.

3 Powerful new HVAC, with 11 targeted vents for optimum performance in hot and cold environments. Cool/heat box as standard.

4 Industry standard isolator lever operation prevents accidental activation when exiting the cab.

5 Spacious luggage tray behind operators seat with 3 independent 12V power supplies. Another handy storage space can be found at the back of the cab in the roof liner, including a hanger for the operator's helmet.

6 The Bluetooth radio, fitted as standard, is fully integrated into the control screen.

Roof, front, rear and side window blinds come as standard providing full cab coverage.

EXCELLENT CONTROL

4 years of hydraulic development combined with proven Japanese components have delivered the very best balance of controllability and efficiency.

JCB
JCB
JCB
JCB
150X LC
X
SERIES

EXCELLENT CONTROL

Effortless working.

1 Proven Japanese hydraulics deliver precise and efficient control.

2 Operator can select Auto-Stop and Auto-Idle depending on preference.

3 Customisable proportional controls allow the operator to set their preference of speed and control of attachments.

Dozer option adds extra versatility.

Power boost button increases pressure by 9% for up to 9 seconds to provide extra tearout in tough conditions.

4 Tracking speed can be found on the joystick for on the move tracking change, whilst a convenience button lets you configure a range of functions such as radio mute, camera cycle, or front screen wash.

5 Slew drive provides high torque on acceleration and braking for greater controllability and refinement.

FACTORY SOLUTIONS

Factory ready solutions for GPS provide greater control.

EXTREMELY EASY

Using latest ergonomic design and with the help of customer and operator feedback, the new 140X and 150X machines have been designed to have best-in-class ease of use when working in any application.

JCB
JCB
140X LCD
X
SERIES

HOSE BURST CHECK VALVE

Factory fitted HBCVs means the machine is ready for lifting operations. Optional bucket HBCVs are available for fork use.

Best-in-class ease of use.

1 Start-stop button for ease of start-up means the operator doesn't have to turn the key to start it back up again. The start sequence also allows you to start digging within 2 seconds.

An intuitive menu navigation can be configured into multiple languages to suit most operators.

2 Pipework shut-off taps now added as standard with SAE fittings, to enable quick connection of attachments when taking a hydraulic option.

3 Advanced tool select system improves attachment handling by monitoring pressure and flow. There is tool storage as standard for up to 10 tools.

4 Easy quickhitch provides simplified operation with an override for removing large breakers or fork attachments.

5 Factory ready GPS solutions facilitate easy fitment and greater operator control.

6 The cab includes mounts as standard to allow guards to be fitted in the field and also includes flat front glass for easy replacement.

1

2

4

3

5

6

X SERIES

EXPERIENCE GREATER PERFORMANCE

We've invested years of research and development and listened to thousands of customers like you to build a machine that's ready to perform in the most extreme conditions, on any job site.

JCB
150X LC
X
SERIES

EXPERIENCE GREATER PERFORMANCE

Best-in-class productivity.

1 Hydraulic pipes and hoses have a large diameter for increased productivity and efficiency. An innovative hydraulic regeneration system means oil is recycled across the cylinders for faster cycle times and reduced fuel consumption.

2 Auto-stop and Auto-idle on the JCB Dieselmax Stage V engine provides significant fuel savings.

3 For extra versatility, JCB offers a full list of auxiliary pipework options including hammer, merged pump flow, auxiliary, and low flow.

4 Machine cooling in 55°C heat with air conditioning running has been achieved with a 15% larger hydraulic cooler for optimum airflow.

5 Larger bucket cylinder for 11% increased bucket tear out.

1

2

3

4

5

X SERIES

EXPERIENCE GREATER PERFORMANCE

EXTREME TEAROUT

11% increase in bucket tear out delivers ultimate productivity.

X SERIES

EXTRAORDINARY ATTENTION TO DETAIL

Building the new X SERIES machines involved a huge investment in state-of-the-art automotive style production facilities. We introduced new tooling, EPD coating, robot welding and established new relationships with many industry-leading suppliers to bring you not just great excavators but exceptional ones.

X
SERIES

EXTRAORDINARY ATTENTION TO DETAIL

THOUGHTFUL DESIGN

The whole design is optimised to protect the machine; side bay doors sit back from the edge for protection and the right hand platform corner and handrail sit within the slew radius to prevent damage and scratching.

EPD COATING

EPD coating improves corrosion resistance and ensures 100% coverage of metal components including hard to cover areas like edges and cavities, while powder coat paint guarantees a constant quality finish.

X SERIES

EXTRAORDINARY ATTENTION TO DETAIL

World-class finish.

1 All components are painted in house using a state-of-the-art paint facility to deliver a high quality finish that's checked for paint adhesion and coverage.

All machines undergo 1,232 validation checks including an intense hot test focusing on vibration, pressure and heat to replicate real-life applications.

2 Significantly reduced vented and open areas means inherently stronger bodywork and reduced painted edges.

3 Doors are bolted directly to the house frame and remain rust-free due to a zinc coating on all wear faces. All fasteners have a zinc finish (Geomet) for improved corrosion resistance, a new bolt and washer design protects paint from damage.

4 New recessed counterweight design protects the rear end and machine branding from impact damage.

World-class assembly.

5 Robot welding of the dig end and undercarriage ensures consistent quality and accuracy.

6 The slew ring mounting face is machined after manufacturing and welding to ensure a flat surface that reduces slewing noise.

X SERIES

EXTENDED SERVICE INTERVALS

The new 14-15 tonne excavators have been designed with greater productivity in mind and that means spending more time working and less time being serviced. Longer service intervals, quality parts and easy access to maintenance points all help to save you time and money.

JCB
160 X LC
JCB
JCB
X
SERIES

EXTENDED SERVICE INTERVALS

Simple servicing.

1 Grouped greasing points make regular maintenance easier and quicker.

2 Optional refuelling pump with and without in-line fuel filter to protect the pump and engine.

3 Ground level access to hour meter, HVAC filter, cab air filter and single fuse box. Optional LED convenience lighting for the service bay and upper structure.

4 Bolt-on handrails and mirrors for easy replacement if damaged.

5 1,000 hour engine air filter life achieved through latest generation filter and standard fit system.

6 Large single face cooling pack means more efficient cooling and easy access for cleaning.

1

2

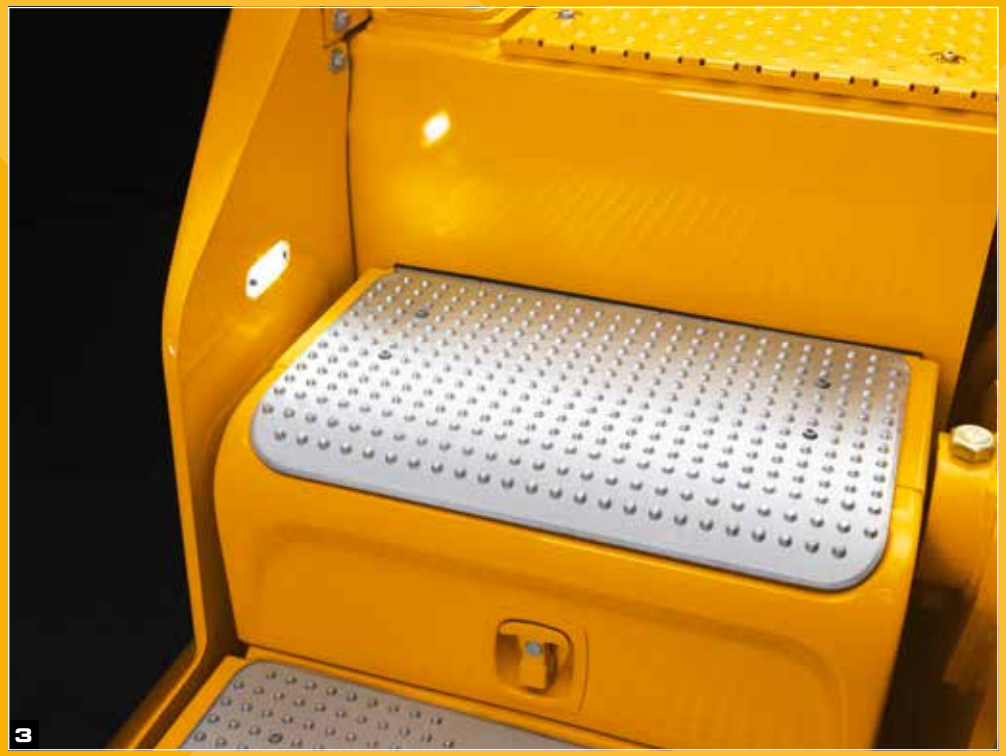
3

4

5

6

X SERIES

EXTENDED SERVICE INTERVALS

BRONZE BUSHES

Graphite impregnated bronze bushes on the boom and dipper pivots for 250 hour greasing intervals.

REDUCED SERVICING

Only 10 checks required for a 500 hour service. Main hydraulic filter service interval extended to 2000 hours from 1000 hours and new fuel filter service intervals are 1000 hours. High grade engine oil only needs to be changed after 500 hours.

X SERIES

EXCEEDINGLY SAFE

At JCB we take safety very seriously and we make sure this forms an important part of the design process. So whether you're an operator, service engineer or site worker, we make working safer.

Safer working.

1 The 140X and 150X boast anti-slip surfaces and comfortable, well positioned grab handles and an area free of tread plate dimples to allow for kneeling during servicing.

2 Flattest, safest operator access to the top of the machine with built in kick strips around the edges.

3 Optional twin or 360° cameras helps operators operate safely.

4 Operator safety is paramount to JCB and the optional dipper limiter can be configured through the display to avoid a cab strike.

X SERIES

OPERATOR PROTECTION

Side guard rails on upper structure as standard. Optional full upper guard rails are available.

AUTHORISED USE

Immobiliser pin code management allows you to remotely authorise usage of the machine – perfect for rental companies.

EXTRA SUPPORT

In a world of tough business decisions where the customer rightfully expects the very best in machine back up and a complete package of value added solutions, JCB delivers. Whatever you need and wherever you are, JCB's worldwide customer support is truly first-class.

LIVE JCB LINK

Machine efficiency.

By providing information like idle time monitoring and fuel consumption, JCB LiveLink saves you money and improves productivity.

Machine reliability.

Accurate hours monitoring and service alerts improve maintenance planning and help rental companies with accurate charging. Technical alerts and maintenance history records help you manage your machines.

Machine monitoring.

Keep track of what your machine's been doing throughout the day with regular performance reports accessed via the LiveLink website.

Machine security.

LiveLink's real time geo-fencing alerts tell you when machines move out of predetermined zones. Curfew alerts inform you of unauthorised usage. JCB have a history of working with the police to recover stolen machines and tackle fuel theft.

X SERIES

EXTRA SUPPORT

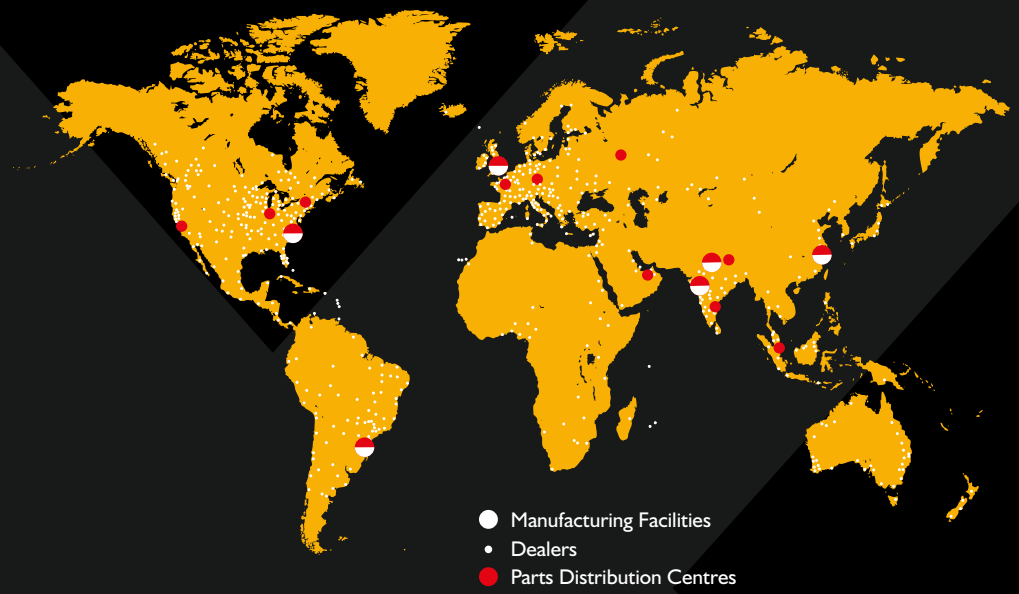

1 Our Technical Support Service provides instant access to factory expertise, day or night, while our Finance and Insurance teams are always on hand to provide fast, flexible, competitive quotes.

2 The global network of JCB Parts Centres is another model of efficiency; with 18 regional bases, we can deliver around 95% of all parts anywhere in the world within 24 hours. Our genuine JCB parts are designed to work in perfect harmony with your machine for optimum performance and productivity.

3 JCB offers comprehensive extended warranties as well as service-only or repair and maintenance contracts. Irrespective of what you opt for, our maintenance teams around the world charge competitive labour rates and offer non-obligation quotations as well as fast, efficient insurance repair work.

Note: JCB LIVELINK and JCB extended warranty packages may not be available in your region, so please check with your local dealer.

X SERIES

Innovating Sustainable Solutions

Our philosophy:
Looking after the planet we help to shape.

In a world that's increasingly under pressure from environmental degradation, finding innovative and sustainable solutions to our customers' needs and managing the resources that go into our products is more important than ever.

Managing energy.

Our efforts to manage energy use in the UK are achieving excellent results – we've reduced energy consumption since 2013, and associated carbon emissions have fallen by 23% in the same period. This approach to energy management is certainly paying off. We've been Carbon Trust Standard certified since 2011, recognising continued improvements to energy efficiency over time.

Making machines more efficient.

Since 2010, we've delivered fuel efficiency innovations across our range, the overall effect has been striking. Between 2010 and 2019, we've helped save approximately 2.5 billion litres of diesel fuel (enough to fill 1000 Olympic size swimming pools), and reduced our machines' CO2 emissions by 43%.

Our cleanest engine yet.

Whether it's our own JCB Dieselmax engine or 3rd party supplier, our brand new Stage V engine seamlessly integrates into the latest generation of machines.

We've designed all engines above 19kW with AutoStop, a fuel saving feature that shuts down the machine during inactive use, eliminating unwanted idle time and thus saving fuel.

As legislation drives all machines above 19kW towards fitting a Diesel Particulate Filter (DPF), we've designed our solution to provide a regeneration process without any performance interruption and, if required, a manual regeneration can be scheduled. All designed to maximise uptime.

STAGE V

Evolving Engines.

Since 1999, our engines have evolved from Stage I emissions compliance through to our brand new Stage V engines, with great results. We now produce 98% less particulate matter (PM) and 97% less nitrogen oxides (NOx) than one produced in 1999, which is a huge step forward towards near zero emissions.

Road to Zero Emissions.

There is a new zero emissions sector emerging and it's emerging very quickly. It's for this reason we have put ourselves at the forefront of alternative power technologies and developed the first ever electric JCB mini excavator.

With urbanisation, machines are operating more closely to people as well as working underground, indoors, and noise and emission restrictive environments.

STATIC DIMENSIONS

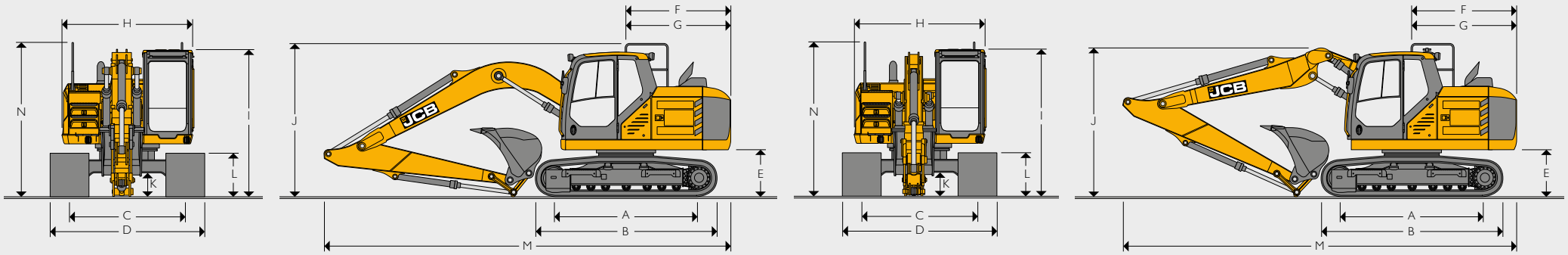

STATIC DIMENSIONS

Model			140X LC			150X LC						150X HD					
A	Track length on ground	mm	2865			2865						3090					
B	Undercarriage overall length	mm	3590			3590						3940					
C	Track gauge	mm	1990			1990						2200					
D	Width over tracks (500 mm trackshoes)	mm	2490			2490						-					
D	Width over tracks (600 mm trackshoes)	mm	2590			2590						2800					
D	Width over tracks (700 mm trackshoes)	mm	2690			2690						2900					
D	Width over tracks (800mm trackshoes)	mm	-			-						3000					
D	Width over tracks (850 mm trackshoes)	mm	2840			2840						-					
D	Width over tracks (900 mm trackshoes)	mm	-			-						3100					
E	Counterweight clearance	mm	905			905						1050					
F	Tail length	mm	2103			2103						2103					
G	Tail swing radius	mm	2150			2150						2150					
H	Width of upper superstructure	mm	2490			2490						2490					
H	Width of upper superstructure (with SIPS)	mm	2619			2619						2619					
I	Height over cab	mm	2866			2866						2916					
I	Height over cab (vandal guard – optional)	mm	3172			3172						3319					
I	Height over cab (FOPS guard)	mm	2965			2965						3112					
J	Height over grab rail	mm	3002			3002						3149					
K	Ground clearance	mm	425			425						470					
L	Track height	mm	811			811						880					
			Mono			Mono			T.A.B			Mono			T.A.B		
Dipper lengths			2.5m	2.7m	3.0m	2.5m	2.7m	3.0m	2.5m	2.7m	3.0m	2.5m	2.7m	3.0m	2.5m	2.7m	3.0m
M	Transport length	mm	7659	7654	7604	7659	7654	7604	7726	7892	7628	7659	7654	7604	7726	7892	7628
N	Transport height	mm	3002	3209	3289	3002	3209	3289	3002	2908	3236	3149	3356	3543	3149	3356	3543

ENGINE		
	140X	150X
Model	JCB Dieselmax 448 TCA EU Stage V	
Type	4-stroke, 4-cylinder in-line, common rail, direct injection, turbocharged and intercooled diesel	
Rated power	81kW (109 hp) at 2200rpm (ISO 14396)	
Piston displacement	4.765 litres	
Air filtration	Dry element with secondary safety element and in cab warning indicator	
Starting system	24 volt	
Batteries	2 x 12 volt	
Alternator	28 volt – 100 ampere	
Maximum torque	516Nm	
Bore and stroke	106mm & 135mm	

SWING SYSTEM	
Swing motor	Axial piston
Swing brake	Hydraulic braking plus automatic spring applied disc type parking brake
Swing torque	36.0 KNm
Swing speed	13.1 rpm
Swing gear	Large diameter, internally toothed fully sealed grease bath lubricated
Dipstick	Remote

TRACK DRIVE		
Type	Fully hydrostatic, two speed with autoshift	
Travel motors	Variable swash axial piston type, fully guarded within undercarriage frame	
Final drive	Planetary reduction, bolt-on sprockets	
Service brake	Hydraulic counter balance valve	
Park brake	Disc type, spring applied, automatic hydraulic release	
Gradeability	70% (35 deg) continuous	
Travel speed	**140X LC/150X LC**	**150X HD**
	High – 6.6 km/h	High – 4.3 km/h
	Low – 3.8 km/h	Low – 2.5 km/h
Tractive effort	116 kNm	194.3 kNm

HYDRAULIC SYSTEM			
Pumps			
Main pumps	2 variable displacement axial piston type		
Maximum flow	2 X 130 l/min		
Servo pump	Gear type		
Servo pump maximum flow	30 l/min		
Control valve			
A combined four and five spool control valve with auxiliary service spool as standard			
Relief valve settings			
Boom/Arm/Bucket	314 bar		
With power boost	343 bar		
Swing circuit	279 bar		
Travel circuit	343 bar		
Pilot control	40 bar		
Filtration			
In tank	105 micron, suction strainer		
Main return line	10 micron, glass fibre element		
Pilot drain line	10 micron, glass fibre element		
Pilot line	10 micron, glass fibre element		
Hydraulic hammer return	10 micron, reinforced microform element		
Hydraulic cylinders			
	Quantity	Bore mm	Rod diameter mm
Boom	2	100	75
Arm	1	115	80
Bucket	1	100	70
TAB	1	140	75

SERVICE CAPACITIES

Fuel tank	Litres	260
Engine coolant	Litres	19.7
Engine oil	Litres	14
Swing reduction gear	Litres	2.2
Track reduction gear (each side)	Litres	3.5
Hydraulic system	Litres	126
Hydraulic tank	Litres	133
DEF fluid	Litres	47.7

OPTIONAL BLADE

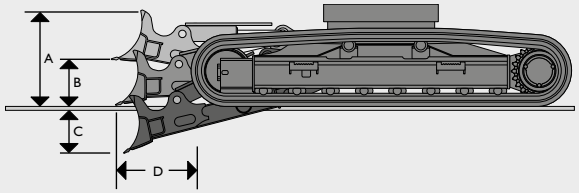

A	Blade height	mm	901
B	Blade lift above ground	mm	448
C	Blade cut below ground	mm	508
D	Blade forward of track	mm	412
	Dozer width – 500mm tracks	mm	2490
	Dozer width – 600mm tracks	mm	2610
	Dozer width – 700mm tracks	mm	2710
Additional machine weight with blade			
	500mm tracks	kg	806
	600mm tracks	kg	814
	700mm tracks	kg	821

SOUND LEVEL

Sound level in cab according to ISO 6396	67 dB LpA
External sound level according to ISO 6395 and EU Directive 2000/14/EC	100 dB LwA

UNDERCARRIAGE

Carriage options	LC – Long Carriage, HD – Heavy Duty Carriage.					
Construction	Fully welded 'X' frame type with central bellyguarding and sloping sidemembers with dirt relief holes under top rollers.					
Recovery point	Front and rear.					
Track type	Sealed and lubricated.					
Upper and lower rollers	Heat treated, sealed and lubricated.					
Track adjustment	Grease cylinder type.					
Track idler	Sealed and lubricated, with spring cushioned recoil.					
Track shoe options	500mm	600mm	700mm	800mm (HD only)	850mm	900mm (HD only)
	•▲■	•■	•	•	•	•
No. of upper rollers (per side)	2					
No. of lower rollers (per side)	7					
No. of track guides (per side)	2 optional on 140X and 150X, 1 standard on 150X HD with 2 optional					
No. of track shoes (per side)	44 (43 on HD)					

TRIPLE GROUSER •
GEOGRIP ▲
RUBBER SHOES ■

WEIGHTS AND GROUND BEARING PRESSURES

Figures include standard 442kg bucket, operator, full fuel tank and 2.5m dipper.

		500mm shoes	600mm shoes	700mm shoes	800mm shoes	850mm shoes	900mm shoes
140X LC Monoboom							
Machine weight	kg	14521	14737	14952	-	15275	-
Ground bearing pressure	kg/cm²	0.51	0.43	0.37	-	0.31	-
150X LC Monoboom							
Machine weight	kg	15121	15337	15552	-	15875	-
Ground bearing pressure	kg/cm²	0.53	0.45	0.39	-	0.33	-
150X LC T.A.B.							
Machine weight	kg	15588	15803	16019	-	16342	-
Ground bearing pressure	kg/cm²	0.54	0.46	0.40	-	0.34	-
150X HD Monoboom							
Machine weight	kg	-	16684	16920	17159	-	17394
Ground bearing pressure	kg/cm²	-	0.45	0.39	0.35	-	0.31
150X HD T.A.B.							
Machine weight	kg	-	17151	17387	17625	-	17861
Ground bearing pressure	kg/cm²	-	0.46	0.40	0.36	-	0.32

BUCKET AND ARM COMBINATION																							**140X**
Bucket options		GP Bucket								HD Bucket						Ditch Maintenance		HD Bucket					
Bucket width	mm	450	600	700	800	900	1000	1250	1350	458	610	762	915	991	1219	1524	1836	600	700	800	1000	1200	1300
Bucket capacity	m^3	0.21	0.35	0.42	0.50	0.54	0.66	0.81	0.89	0.20	0.26	0.34	0.43	0.50	0.61	0.65	0.79	0.35	0.42	0.50	0.66	0.81	0.89
Bucket weight	kg	307	342	366	401	425	460	506	542	275	310	357	402	424	493	475	535	336	364	402	455	520	547
140X LC																							
2.5 m Quickhitch (No Quickhitch)		❑ (❑)	❑ (❑)	❑ (❑)	❑ (❑)	❑ (❑)	❑ (❑)	❑ (■)	■ (●)	❑ (❑)	❑ (❑)	❑ (❑)	❑ (❑)	❑ (❑)	❑ (❑)	❑ (❑)	❑ (■)	❑ (❑)	❑ (❑)	❑ (❑)	❑ (❑)	■ (■)	■ (●)
2.7 m Quickhitch (No Quickhitch)		❑ (❑)	❑ (❑)	❑ (❑)	❑ (❑)	❑ (❑)	❑ (❑)	■ (●)	■ (●)	❑ (❑)	❑ (❑)	❑ (❑)	❑ (❑)	❑ (❑)	❑ (❑)	❑ (❑)	■ (●)	❑ (❑)	❑ (❑)	❑ (❑)	❑ (❑)	■ (●)	■ (●)
3.0 m Quickhitch (No Quickhitch)		❑ (❑)	❑ (❑)	❑ (❑)	❑ (❑)	❑ (❑)	❑ (■)	■ (●)	● (X)	❑ (❑)	❑ (❑)	❑ (❑)	❑ (❑)	❑ (❑)	❑ (❑)	❑ (■)	■ (●)	❑ (❑)	❑ (❑)	❑ (❑)	❑ (■)	■ (●)	● (X)
140X LCD																							
2.5 m Quickhitch (No Quickhitch)		❑ (❑)	❑ (❑)	❑ (❑)	❑ (❑)	❑ (❑)	❑ (❑)	❑ (■)	■ (■)	❑ (❑)	❑ (❑)	❑ (❑)	❑ (❑)	❑ (❑)	❑ (❑)	❑ (❑)	❑ (■)	❑ (❑)	❑ (❑)	❑ (❑)	❑ (❑)	❑ (■)	■ (●)
2.7 m Quickhitch (No Quickhitch)		❑ (❑)	❑ (❑)	❑ (❑)	❑ (❑)	❑ (❑)	❑ (❑)	❑ (■)	■ (●)	❑ (❑)	❑ (❑)	❑ (❑)	❑ (❑)	❑ (❑)	❑ (❑)	❑ (❑)	❑ (■)	❑ (❑)	❑ (❑)	❑ (❑)	❑ (❑)	❑ (■)	■ (●)
3.0 m Quickhitch (No Quickhitch)		❑ (❑)	❑ (❑)	❑ (❑)	❑ (❑)	❑ (❑)	❑ (❑)	■ (●)	● (●)	❑ (❑)	❑ (❑)	❑ (❑)	❑ (❑)	❑ (❑)	❑ (❑)	❑ (❑)	■ (●)	❑ (❑)	❑ (❑)	❑ (❑)	❑ (❑)	■ (●)	● (●)

❑ = Suitable for general excavating materials up to 1800kg/m^3.
■ = Suitable for grading and loading materials up to 1500kg/m^3.
● = Suitable for light excavating materials up to 1200kg/m^3.
X = Not recommended.

These recommendations are given as a guide based on typical operating conditions.
Please contact your distributor for the correct selection of buckets and attachments to suit the application.

BUCKET AND ARM COMBINATION																								**150X**
Bucket options		GP Bucket								HD Bucket						Ditch Maintenance		HD Bucket						
Bucket width	mm	450	600	700	800	900	1000	1250	1350	458	610	762	915	991	1219	1524	1836	600	700	800	1000	1200	1300	
Bucket capacity	m³	0.21	0.35	0.42	0.50	0.54	0.66	0.81	0.89	0.20	0.26	0.34	0.43	0.50	0.61	0.65	0.79	0.35	0.42	0.50	0.66	0.81	0.89	
Bucket weight	kg	307	342	366	401	425	460	506	542	275	310	357	402	424	493	475	535	336	364	402	455	520	547	
150X LC																								
2.5 m Quickhitch (No Quickhitch)		❑ (❑)	❑ (❑)	❑ (❑)	❑ (❑)	❑ (❑)	❑ (❑)	❑ (❑)	❑ (■)	❑ (❑)	❑ (❑)	❑ (❑)	❑ (❑)	❑ (❑)	❑ (❑)	❑ (❑)	❑ (❑)	❑ (❑)	❑ (❑)	❑ (❑)	❑ (❑)	❑ (■)	❑ (■)	
2.7 m Quickhitch (No Quickhitch)		❑ (❑)	❑ (❑)	❑ (❑)	❑ (❑)	❑ (❑)	❑ (❑)	❑ (■)	■ (■)	❑ (❑)	❑ (❑)	❑ (❑)	❑ (❑)	❑ (❑)	❑ (❑)	❑ (❑)	❑ (■)	❑ (❑)	❑ (❑)	❑ (❑)	❑ (❑)	❑ (■)	■ (■)	
3.0 m Quickhitch (No Quickhitch)		❑ (❑)	❑ (❑)	❑ (❑)	❑ (❑)	❑ (❑)	❑ (❑)	❑ (■)	■ (●)	❑ (❑)	❑ (❑)	❑ (❑)	❑ (❑)	❑ (❑)	❑ (❑)	❑ (❑)	❑ (■)	❑ (❑)	❑ (❑)	❑ (❑)	❑ (❑)	❑ (■)	■ (●)	
150X LCD																								
2.5 m Quickhitch (No Quickhitch)		❑ (❑)	❑ (❑)	❑ (❑)	❑ (❑)	❑ (❑)	❑ (❑)	❑ (❑)	❑ (■)	❑ (❑)	❑ (❑)	❑ (❑)	❑ (❑)	❑ (❑)	❑ (❑)	❑ (❑)	❑ (❑)	❑ (❑)	❑ (❑)	❑ (❑)	❑ (❑)	❑ (■)	❑ (■)	
2.7 m Quickhitch (No Quickhitch)		❑ (❑)	❑ (❑)	❑ (❑)	❑ (❑)	❑ (❑)	❑ (❑)	❑ (❑)	■ (■)	❑ (❑)	❑ (❑)	❑ (❑)	❑ (❑)	❑ (❑)	❑ (❑)	❑ (❑)	❑ (❑)	❑ (❑)	❑ (❑)	❑ (❑)	❑ (❑)	❑ (❑)	❑ (■)	
3.0 m Quickhitch (No Quickhitch)		❑ (❑)	❑ (❑)	❑ (❑)	❑ (❑)	❑ (❑)	❑ (❑)	❑ (■)	■ (●)	❑ (❑)	❑ (❑)	❑ (❑)	❑ (❑)	❑ (❑)	❑ (❑)	❑ (❑)	❑ (■)	❑ (❑)	❑ (❑)	❑ (❑)	❑ (❑)	❑ (■)	■ (●)	
150X HD																								
2.5 m Quickhitch (No Quickhitch)		❑ (❑)	❑ (❑)	❑ (❑)	❑ (❑)	❑ (❑)	❑ (❑)	❑ (❑)	❑ (■)	❑ (❑)	❑ (❑)	❑ (❑)	❑ (❑)	❑ (❑)	❑ (❑)	❑ (❑)	❑ (❑)	❑ (❑)	❑ (❑)	❑ (❑)	❑ (❑)	❑ (■)	❑ (■)	
2.7 m Quickhitch (No Quickhitch)		❑ (❑)	❑ (❑)	❑ (❑)	❑ (❑)	❑ (❑)	❑ (❑)	❑ (■)	■ (●)	❑ (❑)	❑ (❑)	❑ (❑)	❑ (❑)	❑ (❑)	❑ (❑)	❑ (❑)	❑ (■)	❑ (❑)	❑ (❑)	❑ (❑)	❑ (❑)	❑ (■)	■ (●)	
150X LC T.A.B.																								
2.5 m Quickhitch (No Quickhitch)		❑ (❑)	❑ (❑)	❑ (❑)	❑ (❑)	❑ (❑)	❑ (❑)	■ (■)	■ (●)	❑ (❑)	❑ (❑)	❑ (❑)	❑ (❑)	❑ (❑)	❑ (❑)	❑ (❑)	■ (■)	❑ (❑)	❑ (❑)	❑ (❑)	❑ (❑)	■ (■)	■ (●)	
2.7 m Quickhitch (No Quickhitch)		❑ (❑)	❑ (❑)	❑ (❑)	❑ (❑)	❑ (❑)	❑ (❑)	■ (●)	● (●)	❑ (❑)	❑ (❑)	❑ (❑)	❑ (❑)	❑ (❑)	❑ (❑)	❑ (❑)	■ (●)	❑ (❑)	❑ (❑)	❑ (❑)	❑ (❑)	■ (●)	● (●)	
3.0 m Quickhitch (No Quickhitch)		❑ (❑)	❑ (❑)	❑ (❑)	❑ (❑)	❑ (❑)	❑ (■)	■ (●)	● (X)	❑ (❑)	❑ (❑)	❑ (❑)	❑ (❑)	❑ (❑)	❑ (■)	❑ (■)	■ (●)	❑ (❑)	❑ (❑)	❑ (❑)	❑ (■)	■ (●)	● (X)	
150X LCD T.A.B.																								
2.5 m Quickhitch (No Quickhitch)		❑ (❑)	❑ (❑)	❑ (❑)	❑ (❑)	❑ (❑)	❑ (❑)	❑ (■)	■ (●)	❑ (❑)	❑ (❑)	❑ (❑)	❑ (❑)	❑ (❑)	❑ (❑)	❑ (❑)	❑ (■)	❑ (❑)	❑ (❑)	❑ (❑)	❑ (❑)	❑ (■)	■ (●)	
2.7 m Quickhitch (No Quickhitch)		❑ (❑)	❑ (❑)	❑ (❑)	❑ (❑)	❑ (❑)	❑ (❑)	■ (■)	■ (●)	❑ (❑)	❑ (❑)	❑ (❑)	❑ (❑)	❑ (❑)	❑ (❑)	❑ (❑)	❑ (■)	❑ (❑)	❑ (❑)	❑ (❑)	❑ (❑)	■ (■)	■ (●)	
3.0 m Quickhitch (No Quickhitch)		❑ (❑)	❑ (❑)	❑ (❑)	❑ (❑)	❑ (❑)	❑ (❑)	■ (●)	● (●)	❑ (❑)	❑ (❑)	❑ (❑)	❑ (❑)	❑ (❑)	❑ (❑)	❑ (❑)	■ (●)	❑ (❑)	❑ (❑)	❑ (❑)	❑ (❑)	■ (●)	● (●)	
150X HD T.A.B.																								
2.5 m Quickhitch (No Quickhitch)		❑ (❑)	❑ (❑)	❑ (❑)	❑ (❑)	❑ (❑)	❑ (❑)	❑ (❑)	❑ (■)	❑ (❑)	❑ (❑)	❑ (❑)	❑ (❑)	❑ (❑)	❑ (❑)	❑ (❑)	❑ (❑)	❑ (❑)	❑ (❑)	❑ (❑)	❑ (❑)	❑ (❑)	❑ (■)	
2.7 m Quickhitch (No Quickhitch)		❑ (❑)	❑ (❑)	❑ (❑)	❑ (❑)	❑ (❑)	❑ (❑)	❑ (■)	■ (■)	❑ (❑)	❑ (❑)	❑ (❑)	❑ (❑)	❑ (❑)	❑ (❑)	❑ (❑)	❑ (■)	❑ (❑)	❑ (❑)	❑ (❑)	❑ (❑)	❑ (■)	■ (■)	

❑ = Suitable for general excavating materials up to 1800kg/m³.
■ = Suitable for light excavating materials up to 1500kg/m³.
● = Suitable for grading and loading materials up to 1200kg/m³.
X = Not recommended.

These recommendations are given as a guide based on typical operating conditions.
Please contact your distributor for the correct selection of buckets and attachments to suit the application.

WORKING RANGE – MONOBOOM 4.7M				150X HD
Dipper length:			2.5m	3.0m
A	Maximum digging reach	mm	8385	8841
B	Maximum digging reach (on ground)	mm	8225	8689
C	Maximum digging depth	mm	5484	5983
D	Maximum digging height	mm	9240	9561
E	Maximum dumping height	mm	6764	7087
F	Maximum vertical wall cut depth	mm	5018	5512
G	Minimum swing radius	mm	2212	2575
H	Minimum dumping height	mm	2473	2055
I	Maximum swing height	mm	6787	7114
J	Minimum swing height	mm	3188	2710
	Maximum dipper tearout	Kgf	6587	5986
	Maximum bucket tearout	Kgf	10452	10452

WORKING RANGE – MONOBOOM 4.7M					140X LC AND 150X LC
Dipper length:			2.5m	2.7m	3.0m
A	Maximum digging reach	mm	8385	8564	8841
B	Maximum digging reach (on ground)	mm	8240	8422	8704
C	Maximum digging depth	mm	5564	5764	6063
D	Maximum digging height	mm	9164	9288	9503
E	Maximum dumping height	mm	6684	6806	7007
F	Maximum vertical wall cut depth	mm	5098	5295	5592
G	Minimum swing radius	mm	2212	2506	2575
H	Minimum dumping height	mm	2393	2267	1975
I	Maximum swing height	mm	6707	6833	7034
J	Minimum swing height	mm	3108	2922	2630
	Maximum dipper tearout	Kgf	6587	6445	5986
	Maximum bucket tearout	Kgf	10452	10452	10452

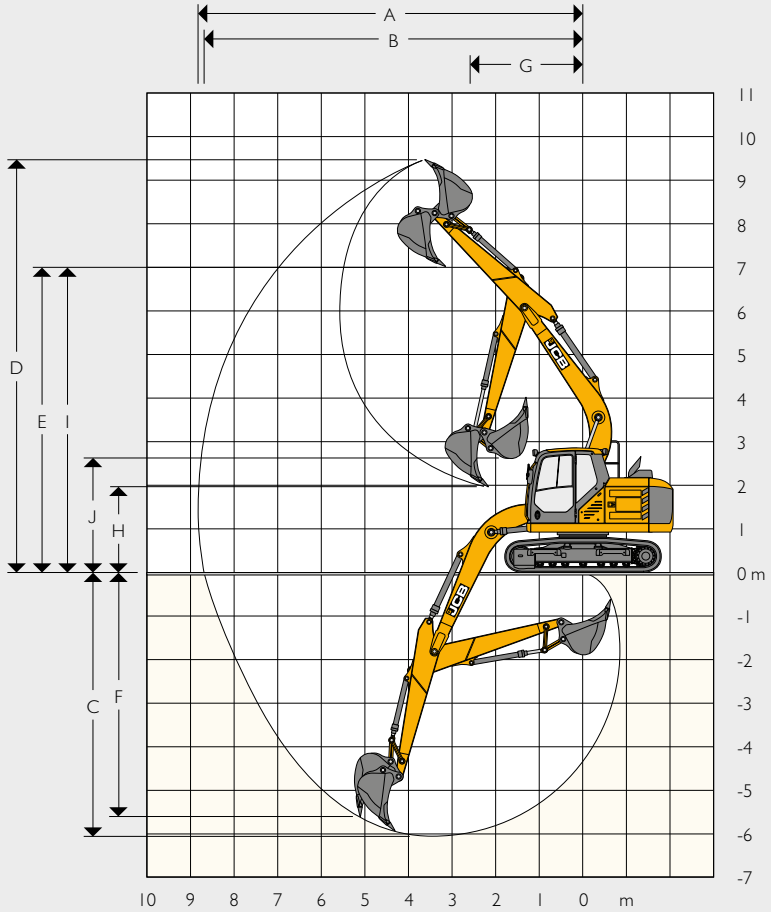

WORKING RANGE – T.A.B 5.0M					150X LC
Dipper length:			2.5m	2.7m	3.0m
A	Maximum digging reach	mm	8796	8984	9271
B	Maximum digging reach (on ground)	mm	8659	8849	9141
C	Maximum digging depth	mm	5824	6021	6319
D	Maximum digging height	mm	9687	9832	10064
E	Maximum dumping height	mm	7192	7336	7568
F	Maximum vertical wall cut depth	mm	5204	5395	5691
G	Minimum swing radius	mm	2731	3036	3149
H	Minimum dumping height	mm	2778	2696	2418
I	Maximum swing height	mm	7189	7334	7566
J	Minimum swing height	mm	3405	3262	2984
	Maximum dipper tearout	Kgf	6587	6445	5986
	Maximum bucket tearout	Kgf	10452	10452	10452

WORKING RANGE – T.A.B 5.0M				150X HD
Dipper length:			2.5m	3.0m
A	Maximum digging reach	mm	8796	9271
B	Maximum digging reach (on ground)	mm	8644	9127
C	Maximum digging depth	mm	5589	6080
D	Maximum digging height	mm	9764	10142
E	Maximum dumping height	mm	7272	7648
F	Maximum vertical wall cut depth	mm	5124	5611
G	Minimum swing radius	mm	2731	3149
H	Minimum dumping height	mm	2858	2498
I	Maximum swing height	mm	7269	7646
J	Minimum swing height	mm	3485	3064
	Maximum dipper tearout	Kgf	6587	5986
	Maximum bucket tearout	Kgf	10452	10452

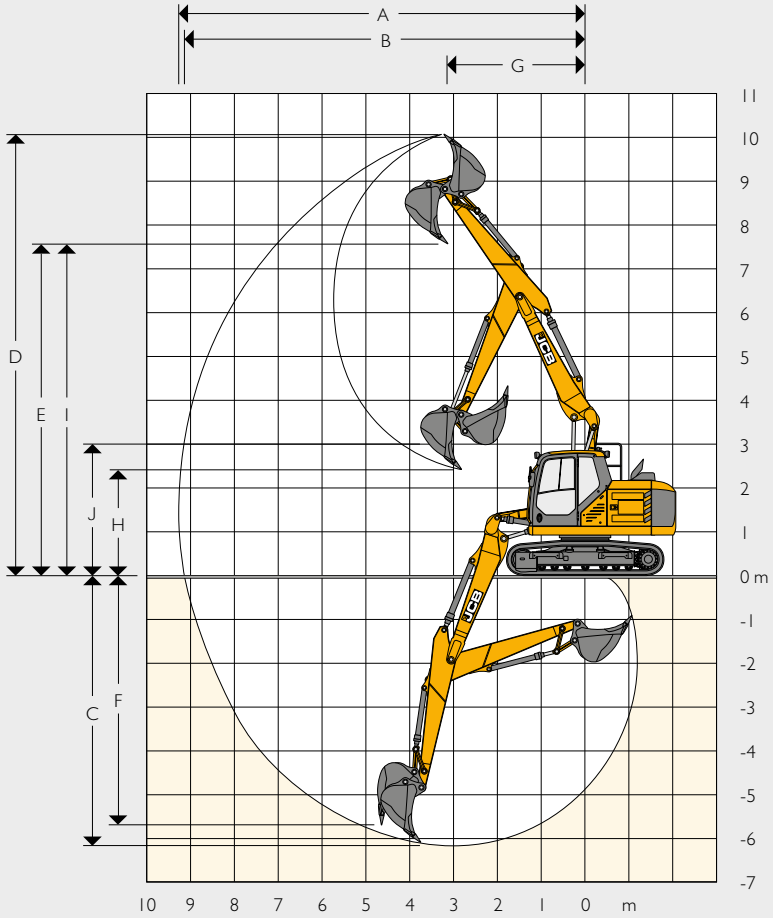

STANDARD/OPTIONAL EQUIPMENT

ENGINE	
JCB, Stage V compliant, DOC/SCRF, liquid cooled diesel turbocharged after cooled electronic 4-cylinder 4.765 litre engine	•
Start pre-heat	•
DEF tank	•
One touch idle	•
Auto-idle function	•
Automatic engine shutdown	•
Fan guard	•
Heavy duty batteries	•
Fuel filter with sedimenter	•
Electronic engine control	•
Fuel cooler	•
Refuelling pump with inline filter	+
Additional fuel filter with water separator	•
Reversing fan	+
SAFETY	
Side guard rails on upper structure and steps	•
Rear view camera	•
Battery Isolator	•
Key	•
Lockable fuel cap	•
Lockable hydraulic tank cap	•
Work lights (2 revolving frame, 2 boom mounted)	•
Roll over protective structure (ROPS)	•
Travel alarm	•
Additional LED light options	+
White noise alarm	+
Cab Guard	+
Green beacon linked to seat belt	+
Fire extinguisher (1kg Powder)	+
Vandal guards	+
Chevron counterweight	+
Rotating roof beacon	+
2 x counterweight beacons	+
Twin camera	+
360 degree camera	+
Folding handrails	+
Full upper surrounding handrails	+
Arm limiter	+

CAB & INTERIOR	
Sound-insulated and 4 dual shock mounted cab	•
Opening front window and removable lower front window	•
Upper door sliding glass in 2 directions	•
Upper windscreen wiper	•
4 button joysticks	•
Travel pedals and T handle levers	•
2 foot rests	•
Immobiliser	•
Loudspeakers and connection for radio	•
Standard cab filtration	•
Electric dual tone horn	•
Interior cab light	•
3 x 12v sockets	•
7" colour monitor	•
Retractable 2" seatbelt	•
Fixed roof glass	•
Roof blind	•
Cool box	•
Cup holder	•
Climate Control	•
Rear window blind	•
3" seat belt	+
2" hi vis seat belt	+
3" hi vis seat belt	+
Front blind	•
Side window blind	•
Bluetooth radio (Linked to pod controls and screen)	•
Carbon air filter	+
Deluxe seat: Heated, adjustable air suspension seat with adjustable headrest.	•
Super deluxe seat: Heated and air ventilation, adjustable air suspension seat with adjustable head rest and electric lumbar support	+
Rain guard visor	+
Dual front wiper	+
UNDERCARRIAGE	
Greased and sealed track links	•
Twin track guards	+
600, 700, 800, 850, 900 mm triple grouser shoe	+
500, 600, 700 dozer	+

HYDRAULIC SYSTEM	
Bucket regeneration	•
One touch power boost	•
Cushion control	•
Cylinder cushioning and contamination seals	•
2 speed track motors	•
Oil cooler	•
10 attachment settings through the display	•
High, merged, medium and low flow options (shut off taps as standard)	+
Advanced tool select to control flow and pressure	+
Proportional control joystick sliders with electronic foot pedal	+
Bio oil	+
Panolin oil	+
Quickhitch pipework	+
Hydraulic quickhitch	+
ISO/SAE change over	+
SAE to BSP converters on high flow auxiliary pipework	+
Quick release couplings	+
Hose burst check valves (Boom, Arm)	+
Twin HBCV For bucket cylinder	+
Auxiliary vent to tank	+
Attachment case drain	+
Steelwrist ready	+
DIG END	
Grouped greasing	•
Dippers 2.5m, 2.7m, 3.0m	+
HD dipper 2.5m, 3.0m	+
Lifting hook tipping link	+
Lifting shackle tipping link	+
Bucket ram guard	+
Triple articulated boom (150X)	+
Guards for boom mounted lights	+
OTHER	
Ground level visible hour meter	•
Large toolbox	•
LiveLink telematics	•
Side impact protection revolving frame	+
Wide core radiators	+
HD slew bearing seal	+
10mm heavy duty plates for upper and lower structure	+
Flyscreen (Cooling Pack + Condenser)	+
Guards for work lights	+
Service bay & access lighting	+
GPS ready	+

STANDARD •
OPTIONAL +

LIFT CAPACITIES – DIPPER LENGTH: 2.5M, MONOBOOM: 4.7M, TRACKSHOES: 500MM, NO BUCKET — **140X LC MONO**

Reach	3m		4m		5m		6m		Capacity at Max. Reach		
Load Point Height	kg	kg	kg	kg	kg	kg	kg	kg	kg	kg	mm
6m	-	-	2780*	2780*	2970*	2970*	-	-	2350*	2350*	5491
4.5m	-	-	3160*	3160*	3070*	3070*	3070*	2690	2180*	2180*	6438
3m	5280*	5280*	4160*	4160*	3610*	3450	3310*	2620	2160*	2080	6942
1.5m	7570*	6840	5350*	4490	4280*	3270	3690*	2520	2270*	1970	7096
0m	7090*	6540	6100*	4270	4730	3130	3630	2440	2520*	2000	6927
– 1.5m	8250*	6500	6200*	4200	4660	3070	3590	2410	3030*	2210	6407
– 3m	7270*	6600	5580*	4250	4330*	3120	-	-	3780*	2800	5436

LIFT CAPACITIES – DIPPER LENGTH: 2.7M, MONOBOOM: 4.7M, TRACKSHOES: 500MM, NO BUCKET — **140X LC MONO**

Reach	3m		4m		5m		6m		Capacity at Max. Reach		
Load Point Height	kg	kg	kg	kg	kg	kg	kg	kg	kg	kg	mm
6m	-	-	2570*	2570*	2780*	2780*	-	-	2470*	2470*	5721
4.5m	-	-	2960*	2960*	2920*	2920*	2990*	2710	2300*	2280	6635
3m	4910*	4910*	3950*	3950*	3470*	3460	3190*	2630	2290	1990	7124
1.5m	7250*	6870	5170*	4500	4160*	3270	3600*	2520	2410*	1890	7275
0m	7290*	6510	5990*	4250	4700*	3120	3610	2420	2660*	1910	7110
– 1.5m	8290*	6440	6180*	4160	4640	3050	3570	2380	3130	2100	6605
– 3m	7430*	6530	5680*	4200	4450*	3070	-	-	3680*	2620	5668

LIFT CAPACITIES – DIPPER LENGTH: 3.0M, MONOBOOM: 4.7M, TRACKSHOES: 500MM, NO BUCKET — **140X LC MONO**

Reach	3m		4m		5m		6m		Capacity at Max. Reach		
Load Point Height	kg	kg	kg	kg	kg	kg	kg	kg	kg	kg	mm
6m					2520*	2520*	2390*	2390*	2160*	2160*	6072
4.5m			2660*	2660*	2690*	2690*	2720*	2720*	2030*	2030*	6940
3m	4380*	4380*	3650*	3650*	3260*	3260*	3030*	2640	2020*	1880	7409
1.5m	6800*	6800*	4910*	4540	3990*	3290	3460*	2520	2120*	1780	7554
0m	7810*	6520	5840*	4260	4590*	3120	3610	2420	2330*	1800	7395
– 1.5m	8330*	6400	6160*	4140	4620	3030	3550	2360	2750*	1960	6911
– 3m	7670*	6460	5820*	4150	4580*	3030	3550*	2390	3530*	2380	6023

Lift capacity front and rear.

Lift capacity full circle.

Notes:

1. Lifting capacities are based on ISO 10567, that is: 75% of minimum tipping load or 87% of hydraulic lift capacity, whichever is the less. Lifting capacities marked* are based on hydraulic capacity.
2. Lift capacities assume that the machine is on firm, level ground.
3. Lift capacities may be limited by local regulations. Please refer to your dealer.

LIFT CAPACITIES – DIPPER LENGTH: 2.5M, MONOBOOM: 4.7M, TRACKSHOES: 500MM, NO BUCKET — **140X LCD MONO**

Reach	3m		4m		5m		6m		Capacity at Max. Reach		
Load Point Height	kg	kg	kg	kg	kg	kg	kg	kg	kg	kg	mm
6m			2780*	2780*	2970*	2970*			2350*	2350*	5491
4.5m			3160*	3160*	3070*	3070*	3070*	2820	2180*	2180*	6438
3m	5280*	5280*	4160*	4160*	3610*	3610	3310*	2750	2160*	2160*	6942
1.5m	7570*	7160	5350*	4700	4280*	3430	3690*	2650	2270*	2070	7096
0m	7090*	6860	6100*	4480	4790*	3290	3830	2560	2520*	2100	6927
– 1.5m	8250*	6820	6200*	4410	4900	3230	3800	2530	3030*	2330	6407
– 3m	7270*	6920	5580*	4460	4330*	3270			3780*	2940	5436

LIFT CAPACITIES – DIPPER LENGTH: 2.7M, MONOBOOM: 4.7M, TRACKSHOES: 500MM, NO BUCKET — **140X LCD MONO**

Reach	3m		4m		5m		6m		Capacity at Max. Reach		
Load Point Height	kg	kg	kg	kg	kg	kg	kg	kg	kg	kg	mm
6m			2570*	2570*	2780*	2780*			2470*	2470*	5721
4.5m			2960*	2960*	2920*	2920*	2920*	2830	2300*	2300*	6635
3m	4910*	4910*	3950*	3950*	3470*	3470*	3190*	2750	2290*	2100	7124
1.5m	7250*	7190	5170*	4710	4160*	3430	3600*	2640	2410*	1990	7275
0m	7290	6830	5990*	4460	4700*	3270	3810	2550	2660*	2020	7110
– 1.5m	8290*	6760	6180*	4370	4880*	3200	3370	2510	3170*	2220	6605
– 3m	7430*	6850	5680*	4410	4450*	3230			3680*	2750	5668

LIFT CAPACITIES – DIPPER LENGTH: 3.0M, MONOBOOM: 4.7M, TRACKSHOES: 500MM, NO BUCKET — **140X LCD MONO**

Reach	3m		4m		5m		6m		Capacity at Max. Reach		
Load Point Height	kg	kg	kg	kg	kg	kg	kg	kg	kg	kg	mm
6m					2520*	2520*	2390*	2390*	2160*	2160*	6072
4.5m			2660*	2660*	2690*	2690*	2720*	2720*	2030*	2030*	6940
3m	4380*	4380*	3650*	3650*	3260*	3260*	3030*	2770	2020*	1970	7409
1.5m	6800*	6800*	4910*	4750	3990*	3440	3460*	2650	2120*	1870	7554
0m	7810*	6840	5840*	4470	4590*	3270	3810	2540	2330*	1890	7395
– 1.5m	8330*	6720	6160*	4350	4850*	3180	3750	2490	2750*	2060	6911
– 3m	7670*	6780	5820*	4360	4580*	3190	3550*	2520	3530*	2510	6023

Lift capacity front and rear.

Lift capacity full circle.

Notes:

1. Lifting capacities are based on ISO 10567, that is: 75% of minimum tipping load or 87% of hydraulic lift capacity, whichever is the less. Lifting capacities marked* are based on hydraulic capacity.
2. Lift capacities assume that the machine is on firm, level ground.
3. Lift capacities may be limited by local regulations. Please refer to your dealer.

LIFT CAPACITIES – DIPPER LENGTH: 2.5M, MONOBOOM: 4.7M, TRACKSHOES: 500MM, NO BUCKET — **150X LC MONO**

Reach	3m		4m		5m		6m		Capacity at Max. Reach		
Load Point Height	kg	kg	kg	kg	kg	kg	kg	kg	kg	kg	mm
6m			2780*	2780*	2970*	2970*			2350*	2350*	5491
4.5m			3160*	3160*	3070*	3070*	3070*	2960	2180*	2180*	6438
3m	5280*	5280*	4160*	4160*	3610*	3610*	3310*	2890	2160*	2160*	6942
1.5m	7570*	7520	5350*	4930	4280*	3600	3690*	2790	2270*	2180	7096
0m	7090*	7090*	6100*	4720	4790*	3470	3950	2700	2520*	2220	6927
– 1.5m	8250*	7180	6200*	4650	4900*	3410	3920	2670	3030*	2460	6407
– 3m	7270*	7270*	5580*	4690	4330*	3450			3780*	3100	5436

LIFT CAPACITIES – DIPPER LENGTH: 2.7M, MONOBOOM: 4.7M, TRACKSHOES: 500MM, NO BUCKET. — **150X LC MONO**

Reach	3m		4m		5m		6m		Capacity at Max. Reach		
Load Point Height	kg	kg	kg	kg	kg	kg	kg	kg	kg	kg	mm
6m			2570*	2570*	2780*	2780*			2470*	2470*	5720
4.5m			2960*	2960*	2920*	2920*	2920*	2920*	2300*	2300*	6635
3m	4910*	4910*	3950*	3950*	3470*	3470*	3190*	2890	2290*	2210	7124
1.5m	7250*	7250*	5170*	4940	4160*	3600	3600*	2780	2410*	2100	7275
0m	7290*	7190	5990*	4700	4700*	3450	3930*	2690	2660*	2130	7110
– 1.5m	8290*	7120	6180*	4610	4880*	3380	3890	2650	3170*	2340	6605
– 3m	7430*	7210	5680*	4640	4450*	3410			3680*	2900	5668

LIFT CAPACITIES – DIPPER LENGTH: 3.0M, MONOBOOM: 4.7M, TRACKSHOES: 500MM, NO BUCKET — **150X LC MONO**

Reach	3m		4m		5m		6m		Capacity at Max. Reach		
Load Point Height	kg	kg	kg	kg	kg	kg	kg	kg	kg	kg	mm
6m					2520*	2520*	2390*	2390*	2160*	2160*	6072
4.5m			2660*	2660*	2690*	2690*	2720*	2720*	2030*	2030*	6940
3m	4380*	4380*	3650*	3650*	3260*	3260*	3030*	2910	2020*	2020*	7409
1.5m	6800*	6800*	4910*	4910*	3990*	3620	3460*	2790	2120*	1980	7554
0m	7810*	7200	5840*	4710	4590*	3450	3840*	2680	2330*	2000	7395
– 1.5m	8330*	7080	6160*	4590	4850*	3360	3870	2630	2750*	2180	6911
– 3m	7670*	7130	5820*	4600	4580*	3370	3550*	2660	3530*	2650	6023

Lift capacity front and rear.

Lift capacity full circle.

Notes:
1. Lifting capacities are based on ISO 10567, that is: 75% of minimum tipping load or 87% of hydraulic lift capacity, whichever is the less. Lifting capacities marked* are based on hydraulic capacity.
2. Lift capacities assume that the machine is on firm, level ground.
3. Lift capacities may be limited by local regulations. Please refer to your dealer.

LIFT CAPACITIES – DIPPER LENGTH: 2.5M, MONOBOOM: 4.7M, TRACKSHOES: 500MM, NO BUCKET — **150X LCD MONO**

Reach	3m		4m		5m		6m		Capacity at Max. Reach		
Load Point Height	kg	kg	kg	kg	kg	kg	kg	kg	kg	kg	mm
6m			2780*	2780*	2970*	2970*			2350*	2350*	5491
4.5m			3160*	3160*	3070*	3070*	3070*	3070*	2180*	2180*	6438
3m	5280*	5280*	4160*	4160*	3610*	3610*	3310*	3010	2160*	2160*	6942
1.5m	7570*	7570*	5350*	5140	4280*	3760	3690*	2910	2270*	2270*	7096
0m	7090*	7090*	6100*	4930	4790*	3620	3990*	2830	2520*	2330	6927
– 1.5m	8250*	7500	6200*	4860	4900*	3560	3980*	2800	3030*	2570	6407
– 3m	7270*	7270*	5580*	4900	4330*	3610			3780*	3240	5436

LIFT CAPACITIES – DIPPER LENGTH: 2.7M, MONOBOOM: 4.7M, TRACKSHOES: 500MM, NO BUCKET — **150X LCD MONO**

Reach	3m		4m		5m		6m		Capacity at Max. Reach		
Load Point Height	kg	kg	kg	kg	kg	kg	kg	kg	kg	kg	mm
6m			2570*	2570*	2780*	2780*			2470*	2470*	5721
4.5m			2960*	2960*	2920*	2920*	2920*	2920*	2300*	2300*	6635
3m	4910*	4910*	3950*	3950*	3470*	3470*	3190*	3020	2290*	2290*	7124
1.5m	7250*	7250*	5170*	5150	4160	3760	3600*	2910	2410*	2200	7275
0m	7290*	7290*	5990*	4910	4700*	3610	3930*	2810	2660*	2230	7110
– 1.5m	8290*	7440	6180*	4820	4880*	3540	3990*	2770	3170*	2450	6605
– 3m	7430*	7430*	5680*	4850	4450*	3560			3680*	3040	5668

LIFT CAPACITIES – DIPPER LENGTH: 3.0M, MONOBOOM: 4.7M, TRACKSHOES: 500MM, NO BUCKET — **150X LCD MONO**

Reach	3m		4m		5m		6m		Capacity at Max. Reach		
Load Point Height	kg	kg	kg	kg	kg	kg	kg	kg	kg	kg	mm
6m					2520*	2520*	2390*	2390*	2160*	2160*	6072
4.5m			2660*	2660*	2690*	2690*	2720*	2720*	2030*	2030*	6940
3m	4380*	4380*	3650*	3650*	3260*	3260*	3030*	3030	2020*	2020*	7409
1.5m	6800*	6800*	4910*	4910*	3990*	3780	3460*	2910	2120*	2070	7554
0m	7810*	7520	5840*	4920	4590*	3610	3840*	2810	2330*	2100	7395
– 1.5m	8330*	7400	6160*	4800	4850*	3520	3980*	2750	2750*	2290	6911
– 3m	7670*	7450	5820*	4810	4580*	3520	3550*	2780	3530*	2770	6023

Lift capacity front and rear.

Lift capacity full circle.

Notes:

1. Lifting capacities are based on ISO 10567, that is: 75% of minimum tipping load or 87% of hydraulic lift capacity, whichever is the less. Lifting capacities marked* are based on hydraulic capacity.
2. Lift capacities assume that the machine is on firm, level ground.
3. Lift capacities may be limited by local regulations. Please refer to your dealer.

LIFT CAPACITIES – DIPPER LENGTH: 2.5M, MONOBOOM: 4.7M, TRACKSHOES: 500MM, NO BUCKET — **150X HD MONO**

Reach	3m		4m		5m		6m		Capacity at Max. Reach		
Load Point Height	kg	kg	kg	kg	kg	kg	kg	kg	kg	kg	mm
6m			2780*	2780*	2970*	2970*			2350*	2350*	5491
4.5m			3160*	3160*	3070*	3070*	3070*	3070*	2180*	2180*	6438
3m	5280*	5280*	4160*	4160*	3610	3610*	3310*	3310*	2160*	2160*	6942
1.5m	7570*	7570*	5350*	5350*	4280*	4280*	3690*	3420	2270*	2270*	7096
0m	7090*	7090*	6100*	5880	4790*	4280	3990*	3330	2520*	2520*	6927
– 1.5m	8250*	8250*	6200*	5800	4900*	4220	3980*	3300	3030*	3030	6407
– 3m	7270*	7270*	5580*	5580*	4330*	4270			3780*	3780*	5436

LIFT CAPACITIES – DIPPER LENGTH: 2.7M, MONOBOOM: 4.7M, TRACKSHOES: 500MM, NO BUCKET — **150X HD MONO**

Reach	3m		4m		5m		6m		Capacity at Max. Reach		
Load Point Height	kg	kg	kg	kg	kg	kg	kg	kg	kg	kg	mm
6m			2570*	2570*	2780*	2780*			2470*	2470*	5721
4.5m			2960*	2960*	2920*	2920*	2920*	2920*	2300*	2300*	6635
3m	4910*	4910*	3950*	3950*	3470*	3470*	3190*	3190*	2290*	2290*	7124
1.5m	7250*	7250*	5170*	5170*	4160*	4160*	3600*	3410	2410*	2410*	7275
0m	7290*	7290*	5990*	5860	4700*	4270	3930*	3320	2660*	2630	7110
– 1.5m	8290*	8290*	6180*	5770	4880*	4200	3990*	3280	3170*	2890	6605
– 3m	7430*	7430*	5680*	5680*	4450*	4220			3680*	3580	5668

LIFT CAPACITIES – DIPPER LENGTH: 3.0M, MONOBOOM: 4.7M, TRACKSHOES: 500MM, NO BUCKET — **150X HD MONO**

Reach	3m		4m		5m		6m		Capacity at Max. Reach		
Load Point Height	kg	kg	kg	kg	kg	kg	kg	kg	kg	kg	mm
6m					2520*	2520*	2390*	2390*	2160*	2160*	6072
4.5m			2660*	2660*	2690*	2690*	2720*	2720*	2030*	2030*	6940
3m	4380*	4380*	3650*	3650*	3260*	3260*	3030*	3030*	2020*	2020*	7409
1.5m	6800*	6800*	4910*	4910*	3990*	3990*	3460*	3420	2120*	2120*	7554
0m	7810*	7810*	5840*	5840*	4590*	4270	3840*	3310	2330*	2330*	7395
– 1.5m	8330*	8330*	6160*	5740	4850*	4180	3980*	3260	2750*	2700	6911
– 3m	7670*	7670*	5820*	5760	4580*	4180	3550*	3290	3530*	3270	6023

Lift capacity front and rear.

Lift capacity full circle.

Notes:

1. Lifting capacities are based on ISO 10567, that is: 75% of minimum tipping load or 87% of hydraulic lift capacity, whichever is the less. Lifting capacities marked* are based on hydraulic capacity.
2. Lift capacities assume that the machine is on firm, level ground.
3. Lift capacities may be limited by local regulations. Please refer to your dealer.

LIFT CAPACITIES – DIPPER LENGTH: 2.5M, T.A.B.: 5.0M, TRACKSHOES: 500MM, NO BUCKET — **150X LC T.A.B.**

Reach	3m		4m		5m		6m		Capacity at Max. Reach		
Load Point Height	kg	kg	kg	kg	kg	kg	kg	kg	kg	kg	mm
6m			2810*	2810*	2840*	2840*			2510*	2510*	5994
4.5m			3270*	3270*	3040*	3040*	2910*	2910*	2300*	2300*	6871
3m			4240*	4240*	3570*	3570*	3190*	2830	2240*	2050	7345
1.5m			5310*	4770	4180*	3490	3550*	2700	2300*	1950	7491
0m			5900*	4350	4610*	3330	3820*	2600	2470*	1980	7331
– 1.5m	7410*	6920	5920*	4470	4690*	3270	3830*	2560	2830*	2170	6842
– 3m	6850*	6850*	5340*	4530	4230*	3310			3190*	2670	5943

LIFT CAPACITIES – DIPPER LENGTH: 2.7M, T.A.B.: 5.0M, TRACKSHOES: 500MM, NO BUCKET — **150X LC T.A.B.**

Reach	3m		4m		5m		6m		Capacity at Max. Reach		
Load Point Height	kg	kg	kg	kg	kg	kg	kg	kg	kg	kg	mm
6m					2690*	2690*	2800*	2800*	2610*	2610*	6228
4.5m			3090*	3090*	2900*	2900*	2790*	2790*	2410*	2220	7076
3m			4050*	4050*	3440*	3440*	3080*	2840	2360*	1960	7536
1.5m			5140*	4780	4070*	3500	3460*	2700	2420*	1870	7679
0m			5810*	4510	4540*	3320	3760*	2590	2590*	1890	7523
– 1.5m	7140*	6850	5910*	4430	4670*	3240	3800	2540	2950*	2070	7048
– 3m	7010*	6970	5420*	4470	4300*	3270	3340*	2590	3110*	2510	6179

LIFT CAPACITIES – DIPPER LENGTH: 3.0M, T.A.B.: 5.0M, TRACKSHOES: 500MM, NO BUCKET — **150X LC T.A.B.**

Reach	3m		4m		5m		6m		Capacity at Max. Reach		
Load Point Height	kg	kg	kg	kg	kg	kg	kg	kg	kg	kg	mm
6m					2470*	2470*	2570*	2570*	2280*	2280*	6580
4.5m			2830	2830	2710*	2710*	2630*	2630*	2120	2070	7388
3m			3780	3780	3250*	3250*	2940*	2860	2070*	1850	7830
1.5m			4910	4830	3910*	3520	3340*	2710	2130*	1760	7967
0m			5680	4520	4440*	3320	3680*	2580	2280*	1780	7817
– 1.5m	6900	6800	5900	4400	4640*	3220	3780	2520	2570*	1930	7361
– 3m	7240	6880	5550	4420	4400*	3230	3520*	2540	2990*	2290	6535

Lift capacity front and rear.

Lift capacity full circle.

Notes:

1. Lifting capacities are based on ISO 10567, that is: 75% of minimum tipping load or 87% of hydraulic lift capacity, whichever is the less. Lifting capacities marked* are based on hydraulic capacity.
2. Lift capacities assume that the machine is on firm, level ground.
3. Lift capacities may be limited by local regulations. Please refer to your dealer.

LIFT CAPACITIES – DIPPER LENGTH: 2.5M, T.A.B.: 4.7M, TRACKSHOES: 500MM, NO BUCKET — **150X LCD T.A.B.**

Reach	3m		4m		5m		6m		Capacity at Max. Reach		
Load Point Height	kg	kg	kg	kg	kg	kg	kg	kg	kg	kg	mm
6m			2810*	2810*	2840*	2840*			2510*	2510*	5994
4.5m			3270*	3270*	3040*	3040*	2910*	2910*	2300*	2300*	6871
3m			4240*	4240*	3570*	3570*	3190*	2960	2240*	2150	7345
1.5m			5310*	4980	4180*	3650	3550*	2830	2300*	2040	7491
0m			5900*	4740	4610*	3490	3820*	2730	2470*	2080	7331
– 1.5m	7410*	7240	5920*	4680	4690*	3430	3840*	2690	2830*	2280	6842
– 3m	6850*	6850*	5340*	4740	4230*	3470			3190*	2800	5943

LIFT CAPACITIES – DIPPER LENGTH: 2.7M, T.A.B.: 4.7M, TRACKSHOES: 500MM, NO BUCKET — **150X LCD T.A.B.**

Reach	3m		4m		5m		6m		Capacity at Max. Reach		
Load Point Height	kg	kg	kg	kg	kg	kg	kg	kg	kg	kg	mm
6m					2690*	2690*	2800*	2800*	2610*	2610*	6228
4.5m			3090*	3090*	2900*	2900*	2790*	2790*	2410*	2320	7076
3m			4050*	4050*	3440*	3440*	3080*	2960	2360*	2060	7536
1.5m			5140*	4990	4070*	3650	3460*	2830	2420*	1960	7679
0m			5810*	4720	4540*	3480	3760*	2710	2590*	1990	7523
– 1.5m	7140*	7140*	5910*	4640	4670*	3400	3830*	2660	2950*	2170	7048
– 3m	7010*	7010*	5420*	4680	4300*	3430	3340*	2710	3110*	2630	6179

LIFT CAPACITIES – DIPPER LENGTH: 3.0M, T.A.B.: 4.7M, TRACKSHOES: 500MM, NO BUCKET — **150X LCD T.A.B.**

Reach	3m		4m		5m		6m		Capacity at Max. Reach		
Load Point Height	kg	kg	kg	kg	kg	kg	kg	kg	kg	kg	mm
6m					2470*	2470*	2570*	2570*	2280*	2280*	6580
4.5m			2830*	2830*	2710*	2710*	2630*	2630*	2120*	2120*	7388
3m			3780*	3780*	3250*	3250*	2940*	2940*	2070*	1940	7830
1.5m			4910*	4910*	3910*	3680	3340*	2840	2130*	1850	7967
0m			5680*	4730	4440*	3480	3680*	2710	2280*	1870	7817
– 1.5m	6900*	6900*	5900*	4610	4640*	3380	3810*	2640	2570*	2030	7361
– 3m	7240*	7200	5550*	4630	4400*	3390	3520*	2660	2990*	2410	6535

Lift capacity front and rear.

Lift capacity full circle.

Notes:

1. Lifting capacities are based on ISO 10567, that is: 75% of minimum tipping load or 87% of hydraulic lift capacity, whichever is the less. Lifting capacities marked* are based on hydraulic capacity.
2. Lift capacities assume that the machine is on firm, level ground.
3. Lift capacities may be limited by local regulations. Please refer to your dealer.

LIFT CAPACITIES – DIPPER LENGTH: 2.5M, T.A.B.: 4.7M, TRACKSHOES: 500MM, NO BUCKET — **150X HD T.A.B.**

Reach	3m		4m		5m		6m		Capacity at Max. Reach		
Load Point Height	kg	kg	kg	kg	kg	kg	kg	kg	kg	kg	mm
6m			3060*	3060*	3210*	3210*			2390*	2390*	5508
4.5m			3440*	3440*	3300*	3300*	3250*	3250*	2210*	2210*	6453
3m	5640*	5640*	4440*	4440*	3830*	3830*	3490*	3400	2190*	2190*	6955
1.5m	7870*	7870*	5590*	5590*	4480*	4220	3850*	3270	2280*	2280*	7110
0m	6980*	6980*	6280*	5470	4940*	4030	4110*	3150	2520*	2520*	6941
– 1.5m	8350*	8130	6310*	5310	4990*	3920	4060*	3070	3020*	2810	6422
– 3m	7270*	7270*	5610*	5270	4360*	3880			3770*	3470	5453

LIFT CAPACITIES – DIPPER LENGTH: 2.7M, T.A.B.: 4.7M, TRACKSHOES: 500MM, NO BUCKET — **150X HD T.A.B.**

Reach	3m		4m		5m		6m		Capacity at Max. Reach		
Load Point Height	kg	kg	kg	kg	kg	kg	kg	kg	kg	kg	mm
6m			2830*	2830*	3000*	3000*			2470*	2470*	5721
4.5m			3220*	3220*	3140*	3140*	3100*	3100*	2300*	2300*	6635
3m	5270*	5270*	4230*	4230*	3680*	3680*	3360*	3360*	2290*	2290*	7124
1.5m	7580*	7580*	5420*	5420*	4360*	4220	3750*	3260	2410*	2410*	7275
0m	7290*	7290*	6190*	5470	4860*	4020	4050*	3140	2660*	2470	7110
– 1.5m	8420*	8120	6310*	5300	4980*	3900	4060*	3050	3170*	2680	6605
– 3m	7470*	7470*	5720*	5240	4480*	3850			3690*	3260	5668

LIFT CAPACITIES – DIPPER LENGTH: 3.0M, T.A.B.: 4.7M, TRACKSHOES: 500MM, NO BUCKET — **150X HD T.A.B.**

Reach	3m		4m		5m		6m		Capacity at Max. Reach		
Load Point Height	kg	kg	kg	kg	kg	kg	kg	kg	kg	kg	mm
6m					2740*	2740*	2440*	2440*	2180*	2180*	6081
4.5m			2930*	2930*	2920*	2920*	2910*	2910*	2040*	2040*	6948
3m	4740*	4740*	3930*	3930*	3480*	3480*	3210*	3210*	2040*	2040*	7416
1.5m	7140*	7140*	5170*	5170*	4190*	4190*	3630*	3630	2130*	2130*	7561
0m	7760*	7760*	6050*	5490	4760*	4040	3970*	3150	2330*	2330	7403
– 1.5m	8480*	8100	6300*	5290	4970*	3890	4070*	3040	2750*	2510	6919
– 3m	7720*	7720*	5880*	5210	4630*	3830	3580*	3010	3540*	2990	6032

Lift capacity front and rear.

Lift capacity full circle.

Notes:

1. Lifting capacities are based on ISO 10567, that is: 75% of minimum tipping load or 87% of hydraulic lift capacity, whichever is the less. Lifting capacities marked* are based on hydraulic capacity.
2. Lift capacities assume that the machine is on firm, level ground.
3. Lift capacities may be limited by local regulations. Please refer to your dealer.

Your nearest JCB dealer

29158 en-GB 02/21 Issue 4

JCB Sales Limited, Rocester, Staffordshire, United Kingdom ST14 5JP.
Tel: +44 (0)1889 590312 Email: salesinfo@jcb.com
Download the very latest information on this product range at: www.jcb.com

©2021 JCB Sales. All rights reserved. No part of this publication may be reproduced, stored in a retrieval system, or transmitted in any form or by any other means, electronic, mechanical, photocopying or otherwise, without prior permission from JCB Sales. All references in this publication to operating weights, sizes, capacities and other performance measurements are provided for guidance only and may vary dependant upon the exact specification of machine. They should not therefore be relied upon in relation to suitability for a particular application. Guidance and advice should always be sought from your JCB Dealer. JCB reserves the right to change specifications without notice. Illustrations and specifications shown may include optional equipment and accessories. The JCB logo is a registered trademark of J C Bamford Excavators Ltd.